2.1 Installing the Wall Mount

Before installing the wall mount ensure the following:

• Installation should only be done by a certified professional.

• Maximum wall mount kit load capacity:150kg (330lbs).

• When setting the display down to install the wall mount, place it face down on a flat and stable surface covered by a protective sheet or cloth and a table cushion as shown in the illustration provided. DO NOT place the display on an uncovered surface.

• Ensure that all the following parts are included in the wall mount kit:

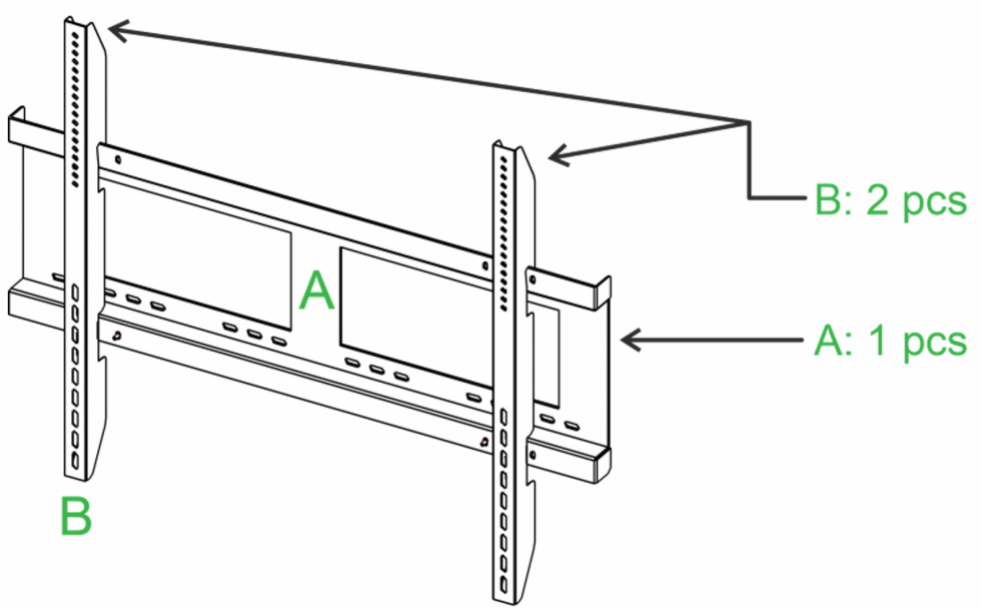

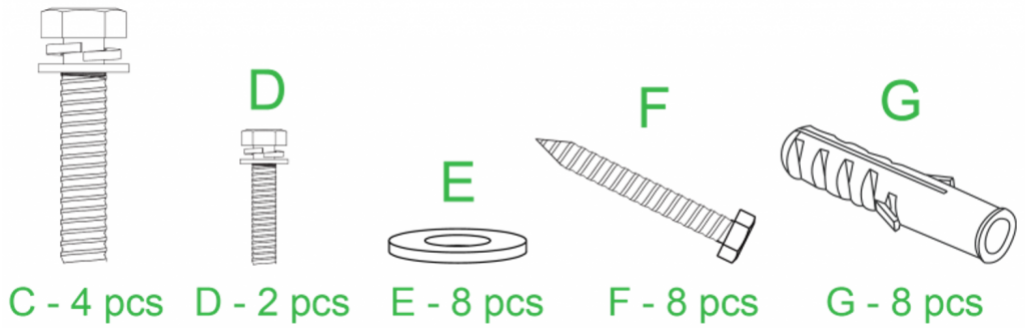

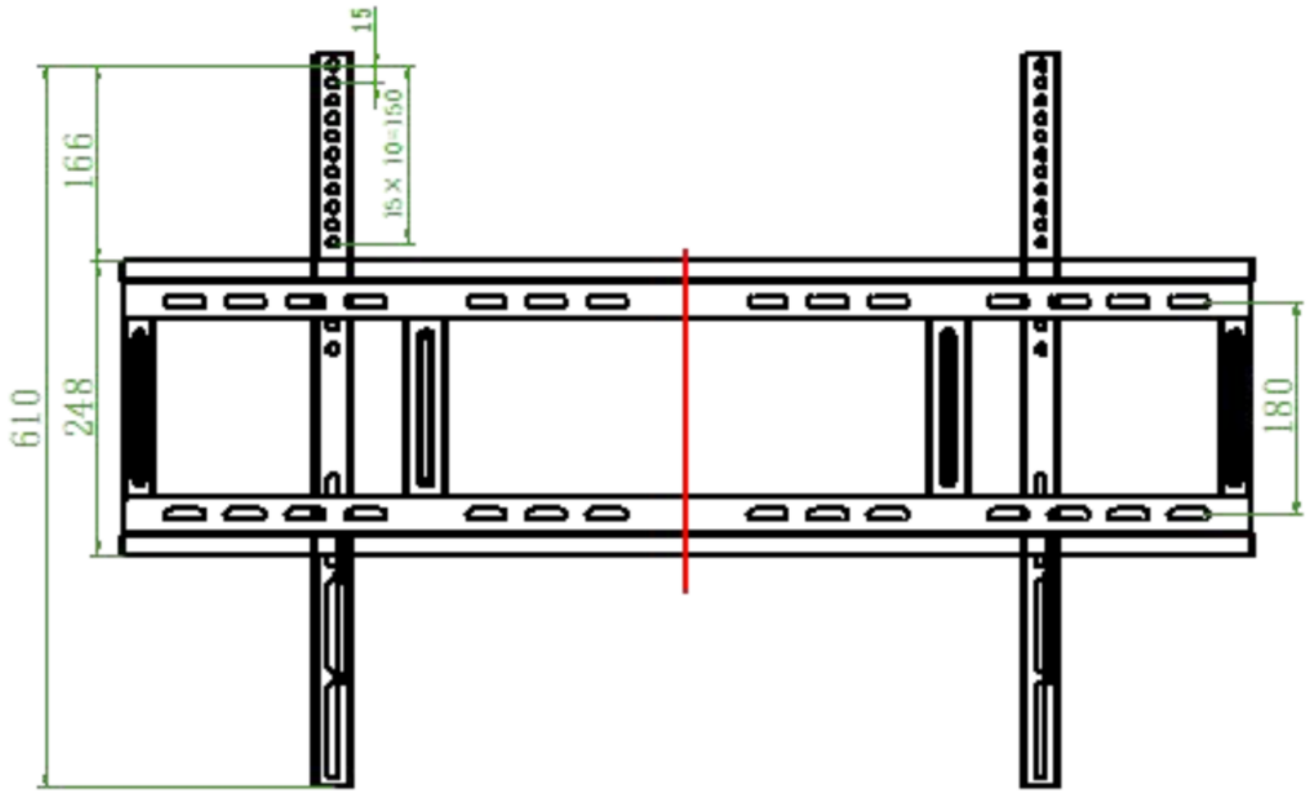

wall mount bracket dimension / units of length are “mm”

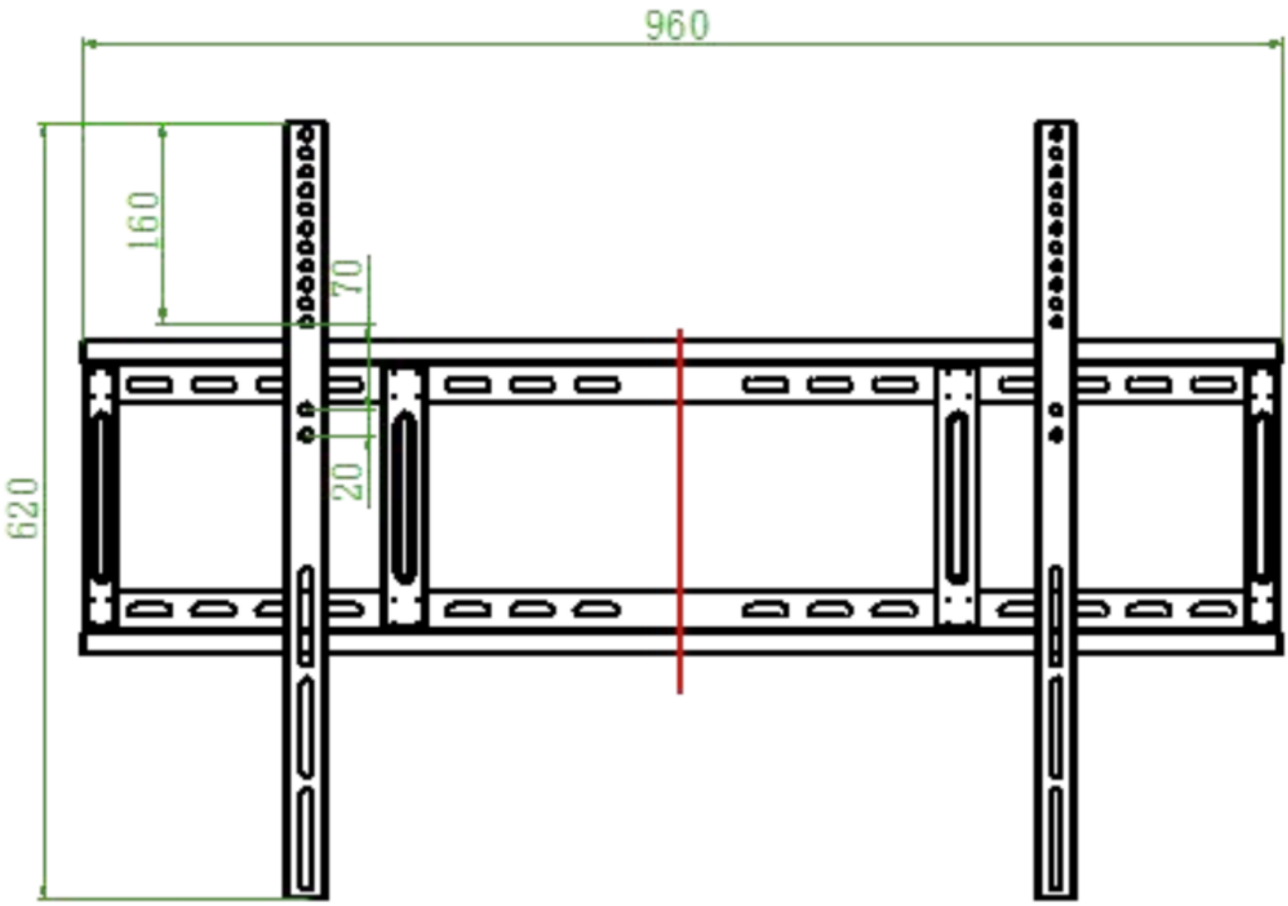

Wall Mount Frame dimension / *units of length are “mm”*
A: Wall Mount Frame x1
B: Wall Mount Brackets x2
C: Bracket Screws x6 (M8 x25mm , 4 pcs are recommended for installation)
D: Frame Screws x2 (M6x130mm)
E: Wall Screw Washers x10 (Φ120 x 8.5×1.5 mm , 8 pcs are recommended for installation)
F: Wall Screws x10 (Φ7 x 55 mm , 8H , 8 pcs are recommended for installation)
G: Anchor Screws x10 (Φ10x 50 mm , PP, 8 pcs are recommended for installation)

To mount NovoTouch onto a wall follow the instructions below:

NOTE: This display only supports landscape display orientation. Do not mount in portrait display orientation or mount facing up or facing down.

1. Install the two (B) the wall mount brackets onto the

display using the four (C) bracket screws.

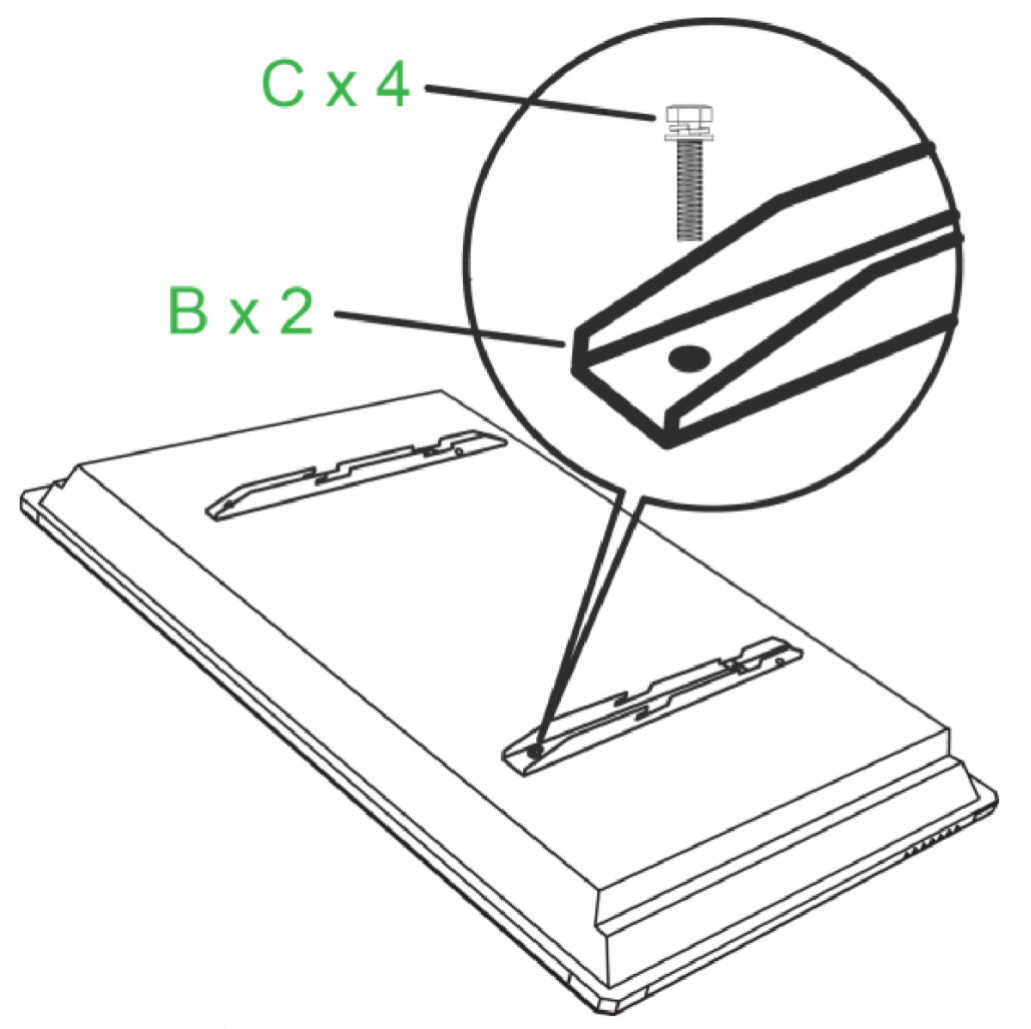

2. Install the eight (G) anchor screws into the wall you want to mount NovoTouch on.

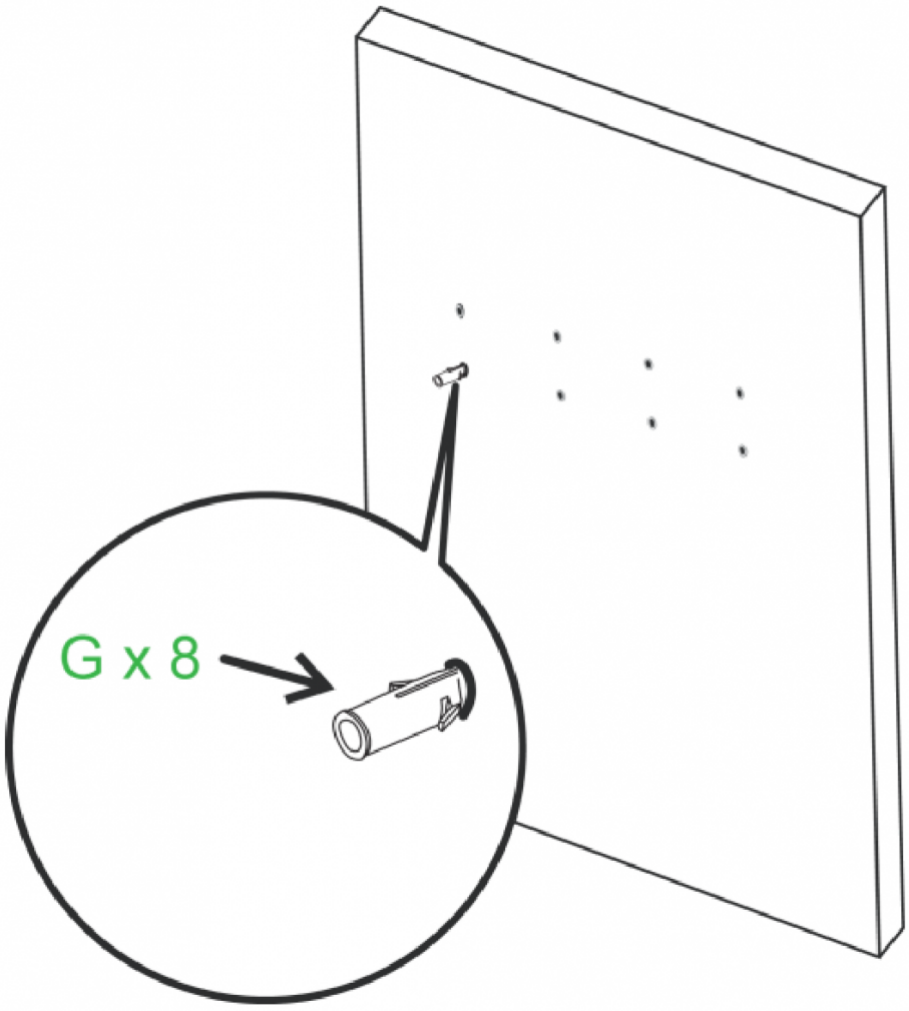

3. Install the (A) wall mount frame onto the wall by securing the eight (F) wall screws and (E) washers to the anchors.

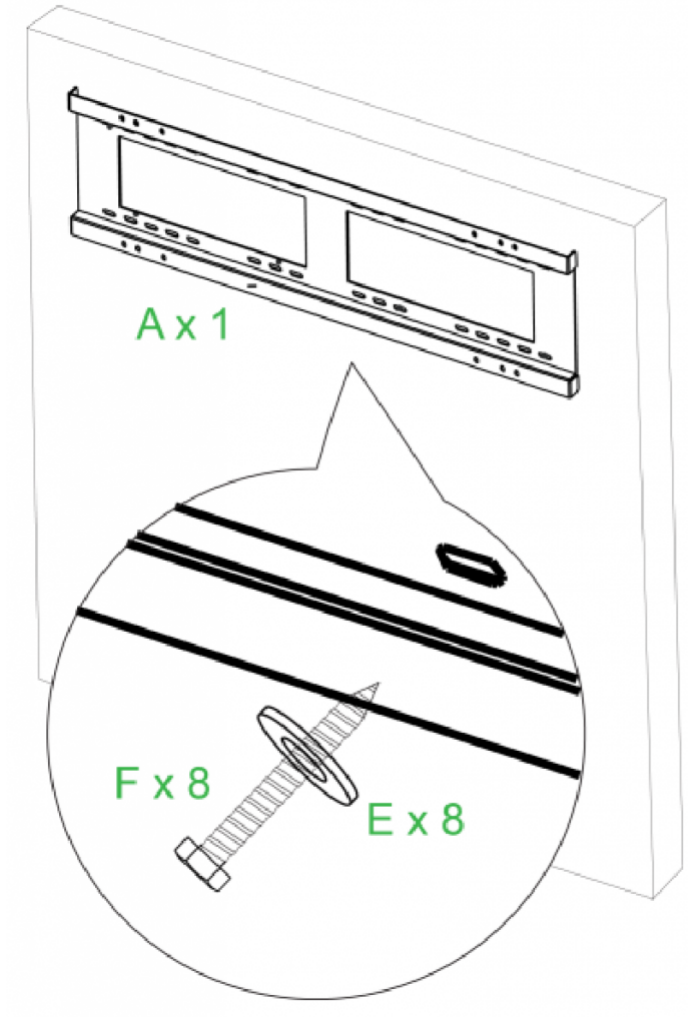

4. Mount the displays’ wall mount brackets onto the wall mount frame.

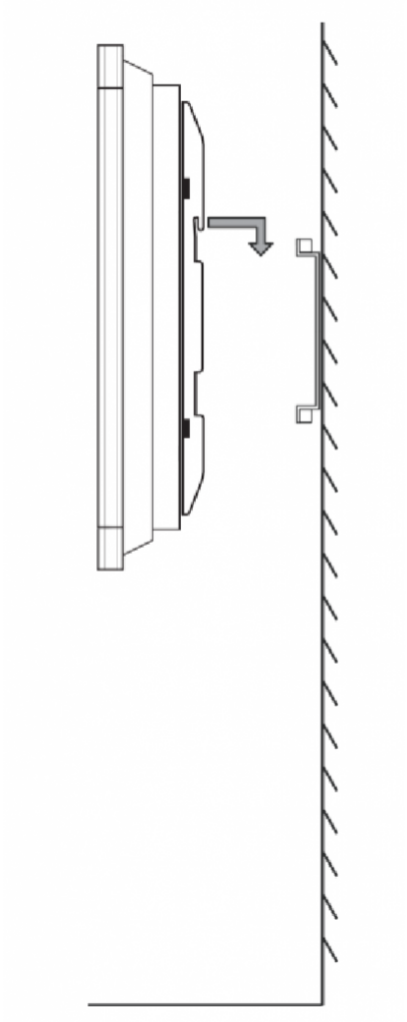

5. Secure the wall mount brackets to the frame using the two (D) frame screws.

D x 2